# DiversaCut 2110® Dicer

## High Capacity & Durable, Compact Design

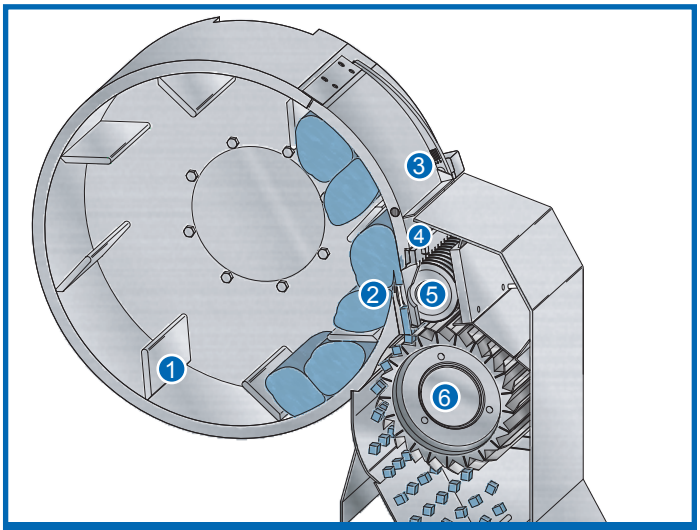


DiversaCut 2110® Dicer

## SPECIFICATIONS

Length: . . . . . 63.62" (1616 mm)
Width: . . . . . *64.07" (1623 mm)
Height: . . . . . 68.44" (1738 mm)
Net Weight: . . . . . 1500 lb (681 kg)
Motor: . . . . . 5 or 10 HP (3.7 or 7.5 kW)

## APPLICATIONS

The DiversaCut 2110® Dicer, by Urschel Laboratories, uniformly dices, granulates, strip cuts, and slices a wide variety of products at high production capacities including potatoes, tomatoes, carrots, turnips, rutabagas, celery, pineapple, bread, candies, cookies, meats, preformed boneless turkey roasts, pet food emulsions, sugar beets, and many other applications.

Maximum product input size is 10" (254 mm) in any dimension. Various discharge chutes available depending on product application. Stainless steel construction and hinged access panels promote sanitation and ease maintenance. The machine features continuous operation for uninterrupted production and simplified design for easy cleanup and maintenance.

## OPERATING PRINCIPLE

Product is delivered to a feed hopper, then enters a rotating impeller **[ 1 ]**. The resulting centrifugal force holds the product against the inside of the case as the impeller paddles carry the product past the slicing knife **[ 2 ]**. An adjustable case gate **[ 3 ]** on the impeller case allows product to move outward across the edge of the slicing knife. The distance between the edge of the slice gate and the slicing knife edge determines the slice thickness.

As the slices emerge, they are guided between the slicing knife and stripper plate **[ 4 ]** before entering circular knives **[ 5 ]** where they are cut into strips. The strips pass directly into the crosscut knives **[ 6 ]** which make the final cut.

## TYPES OF CUTS

**Slices:** By removing the crosscut spindle and the circular knife spindle, the machine can make slices thru the full range of slice thicknesses.
Flat Slices: 1/16 to 1" (1.6 to 25.4 mm)
Crinkle Slices: 1/8 to 1" (3.2 to 25.4 mm)
Deep Crinkle Slices: 1/8 to 1/2" (3.2 to 12.7 mm)

**Strip Cuts:** Flat, crinkle, and deep crinkle strip cuts in a variety of widths can be made by removing either the crosscut knife spindle or the circular knife spindle assembly.

Minimum flat strips such as 1/8 x 1/8" x length of product (3.2 x 3.2 mm x length of product); crinkle strips such as 9/32 x 9/32" x length of product (7.1 x 7.1 mm x length of product); Maximum flat strips such as 1 x 1" x length of product (25.4 x 25.4 mm x length of product); crinkle strips such as 5/8 x 5/8" x length of product (15.9 x 15.9 mm x length of product). Note: Combinations of circular knives or crosscut knives can be used to shorten length of strips.

**Shreds:** A shredding spindle can be installed in place of the crosscut knife spindle. Shreds will vary depending on number of spacers and shred discs used. For optimum results, a test cut of your product at an Urschel Product Test Cutting Facility is recommended.

**Dices/Granulations:** A slicing knife, circular knife spindle, and cross-cut knife spindle are used for dicing. Changing the dice size is done by using the required cutting spindles and adjusting the slice thickness.
Circular Knife Cuts: 1/8 to 3" (3.2 to 76.2 mm)
Crosscut Knife Cuts: 1/8 to 1-1/2" (3.2 to 38.1 mm)
Crosscut Knife Crinkle Cuts: 9/32 to .583" (7.1 to 14.8 mm)
Crosscut Knife Deep Crinkle Cuts: 3/8 to 1/2" (9.5 to 12.7 mm)
Crosscut Knife V-Cuts: 5/16 to 1/2" (7.9 to 12.7 mm)

*If your product application is not mentioned on this page, contact your local Urschel representative to determine the most effective solution to your size reduction needs.*

(over)

# DiversaCut 2110® Dicer
# Dimensional Drawing

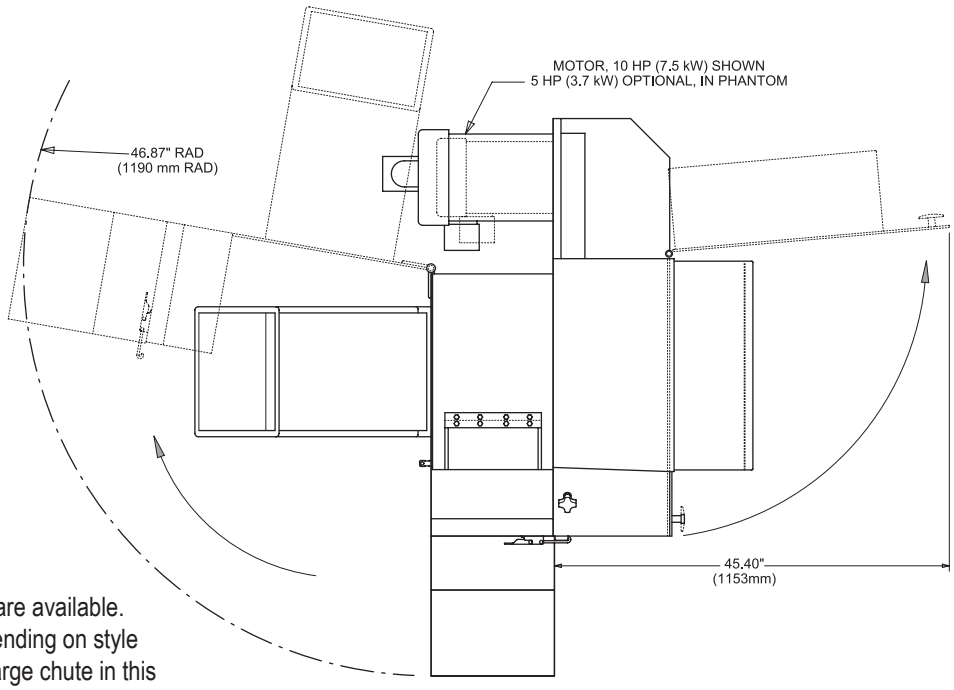


*Various discharge chutes are available. Machine width varies depending on style of discharge chute. Discharge chute in this drawing displays the maximum machine width.

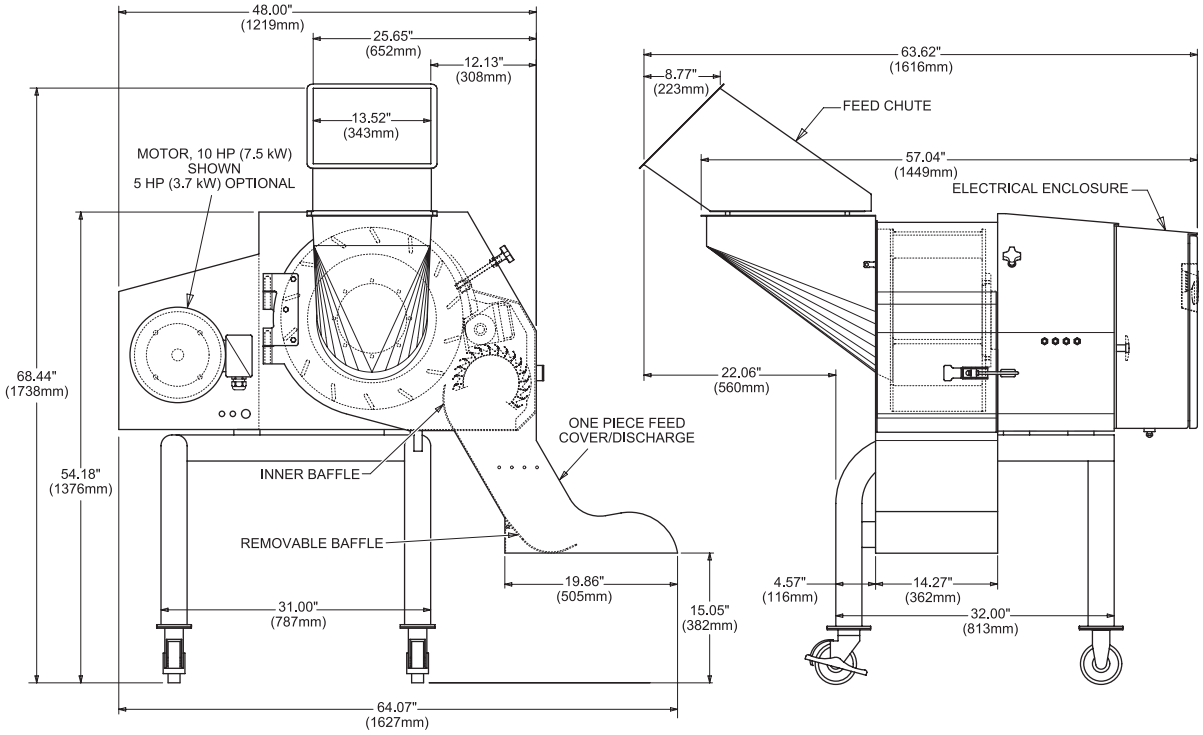


## You Are Invited to Test Cut Your Product

Urschel Laboratories has a complete network of test facilities and experienced service and sales representatives around the world ready to work for you on any size reduction application. Contact your local Urschel Laboratories' representative to schedule a comprehensive, no-obligation test today at www.urschel.com.


URSCHEL
LABORATORIES INCORPORATED
The Global Leader in Food Cutting Technology
www.urschel.com | info@urschel.com



® DiversaCut, DiversaCut 2110, and Urschel are registered trademarks of Urschel Laboratories, Inc. | L2575 November 2013 (s.s. L2220)